World Cup Warsaw 09-11.10.2009

Sabre Team

Overall ranking

Ranking	Name	Country	Club
1	POL	POL	
2	FRA	FRA	
3	GRE	GRE	
4	GER	GER	
5	USA	USA	

Document Engarde - 2009-10-11 18:27:16

World Cup Warsaw 09-11.10.2009

Sabre Team

Tableau de 8

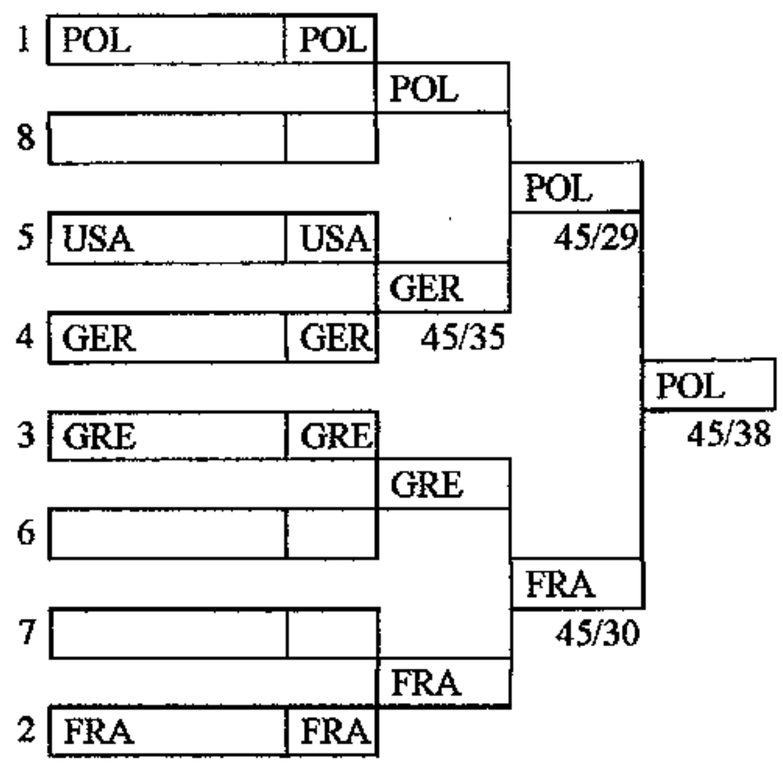

Third place

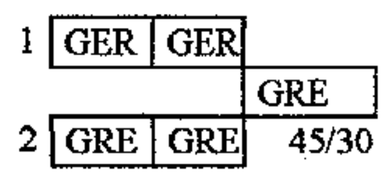

Document Engarde - 2009-10-11 18:27:58